GIA

GIA REPORT
1545398083

Verify this report at GIA.edu

FACSIMILE
This is a digital representation of the original GIA Report. This representation might not be accepted in lieu of the original GIA Report in certain circumstances. The original GIA Report includes certain security features which are not reproducible on this facsimile.

GIA NATURAL COLORED DIAMOND REPORT

January 26, 2026

Report Type ..... Grading Report
GIA Report Number 1545398083
Shape and Cutting Style ..... Pear Modified Brilliant
Measurements ..... 7.77 x 4.63 x 2.92 mm

Carat Weight ..... 0.73 carat
Color Grade ..... Fancy Yellow
Color Origin ..... Natural
Color Distribution ..... Even
Clarity Grade VS2
Proportions:

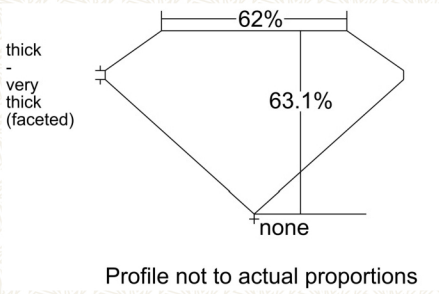

Profile not to actual proportions

Polish ..... Very Good
Symmetry ..... Very Good
Fluorescence ..... None
Inscription(s): GIA 1545398083
Comments: Surface graining is not shown.

ADDITIONAL INFORMATION

GIA COLORED DIAMOND SCALE

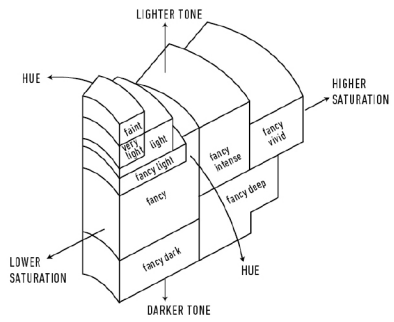

Illustration of GIA fancy color grade interrelationships

GIA CLARITY SCALE

	FLAWLESS
	INTERNALLY FLAWLESS
VERY VERY SLIGHTLY INCLUDED	VVS_1
	VVS_2
VERY SLIGHTLY INCLUDED	VS_1
	VS_2
SLIGHTLY INCLUDED	SI_1
	SI_2
INCLUDED	I_1
	I_2
	I_3

CLARITY CHARACTERISTICS

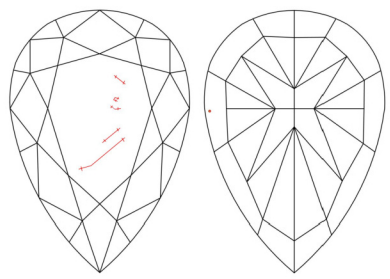

KEY TO SYMBOLS*

Twinning Wisp

Knot

* Red symbols denote internal characteristics (inclusions). Green or black symbols denote external characteristics (blemishes). Diagram is an approximate representation of the diamond, and symbols shown indicate type, position, and approximate size of clarity characteristics. All clarity characteristics may not be shown. Details of finish are not shown.

The results documented in this report refer only to the diamond described, and were obtained using the techniques and equipment available to GIA at the time of examination. This report is not a guarantee or valuation. For additional information and important limitations and disclaimers, please see GIA.edu/terms or call +1 800 421 7250 or +1 760 603 4500. ©2023 Gemological Institute of America, Inc.

reportcheck.gia.edu

THE SECURITY FEATURES IN THIS DOCUMENT, INCLUDING THE HOLOGRAM, SECURITY SCREEN AND MICROPRINT LINES, IN ADDITION TO THOSE NOT LISTED, EXCEED DOCUMENT SECURITY INDUSTRY GUIDELINES.

GIA

FACSIMILE
This is a digital representation of the original GIA Report. This representation might not be accepted in lieu of the original GIA Report in certain circumstances. The original GIA Report includes certain security features which are not reproducible on this facsimile.

GIA NATURAL DIAMOND DOSSIER®

August 22, 2025
GIA Report Number 6532193528
Shape and Cutting Style ..... Pear Brilliant
Measurements ..... 7.82 x 4.96 x 2.88 mm

GRADING RESULTS

Carat Weight ..... 0.70 carat
Color Grade ..... G
Clarity Grade VS2

ADDITIONAL GRADING INFORMATION

Polish ..... Very Good
Symmetry ..... Very Good
Fluorescence ..... None
Clarity Characteristics..... Crystal, Feather, Twinning Wisp, Cloud
Inscription(s): GIA 6532193528

GIA REPORT
6532193528

Verify this report at GIA.edu

PROPORTIONS

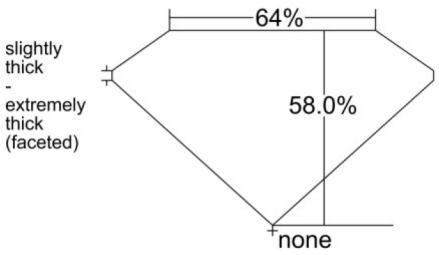

Profile not to actual proportions

GRADING SCALES

GIA COLOR SCALE

COLORLESS	D
	E
	F
NEAR COLORLESS	G
	H
	I
	J
FAINT	K
	L
	M
VERY LIGHT	N
	O
	P
	Q
	R
LIGHT	S
	T
	U
	V
	W
	X
	Y
	Z

GIA CLARITY SCALE

	FLAWLESS
	INTERNALLY FLAWLESS
VERY VERY SLIGHTLY INCLUDED	VVS_1
	VVS_2
VERY SLIGHTLY INCLUDED	VS_1
	VS_2
SLIGHTLY INCLUDED	SI_1
	SI_2
INCLUDED	I_1
	I_2
	I_3

The results documented in this report refer only to the diamond described, and were obtained using the techniques and equipment available to GIA at the time of examination. This report is not a guarantee or valuation. For additional information and important limitations and disclaimers, please see GIA.edu/terms or call +1 800 421 7250 or +1 760 603 4500. ©2023 Gemological Institute of America, Inc.

reportcheck.gia.edu

THE SECURITY FEATURES IN THIS DOCUMENT, INCLUDING THE HOLOGRAM, SECURITY SCREEN AND MICROPRINT LINES, IN ADDITION TO THOSE NOT LISTED, EXCEED DOCUMENT SECURITY INDUSTRY GUIDELINES.